FOUNDATION FOR UTILITY FACILITY

TMBP–SP001–CS–FDN–D104

NOTES :

1. BEFORE STARTING CONSTRUCTION, CONTRACTOR SHALL VERIFY ACTUAL FIELD CONDITION AND DETERMINE LOCATION, ELEVATION OF EXISTING GRADING AND OTHER STRUCTURE. THE CONTRACTOR SHALL TAKE NECESSARY MEASURES TO HOLD SAFE AND PREVENT DAMAGE TO ANY EXISTING FACILITIES.

DRAWING REFERENCE	DESCRIPTION	REV	DATE	DESCRIPTION	PREPR'D	CHECK'D	APRV'D	CHECKED	APPROVED
		A	12–01–2026	ISSUED FOR REVIEW	NAS	AS	MR	YR	MRZ/RS

PT. PERTAMINA EP APPROVAL

PROCET :

JASA PEMBANGUNAN FASILITAS PRODUKSI STASIUN PENGUMPUL (SP) TANJUNG MIRING BARAT & KARANGAN TIMUR

OWNER :

skkmigas PERTAMINA EP

CONTRACTOR :

POG

SCALE :	DRAWING NO.	SHEET. NO.	REV
NTS	TMBP–SP001–CS–FDN–D104	1 OF 2	A

DRAWING TITLE :

FOUNDATION FOR UTILITY FACILITY

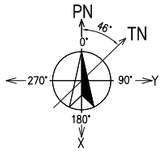

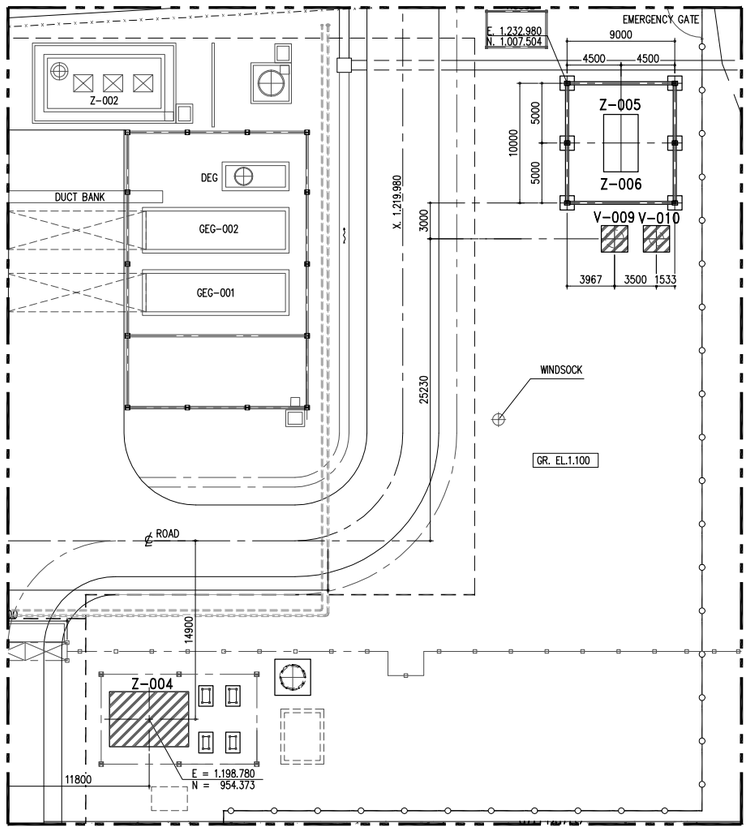

TYPE-Z FOUNDATION DETAIL

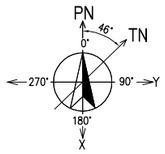

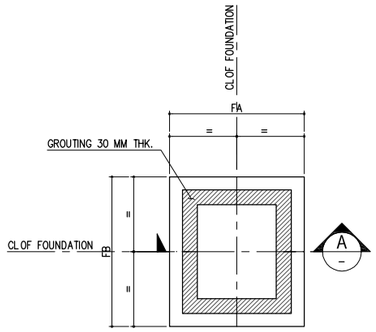

PLAN
SCALE 1 : 30

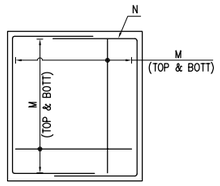

REBAR ARRANGEMENT
SCALE 1 : 30

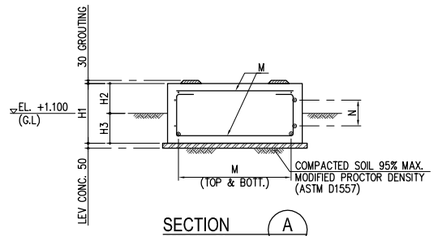

SECTION A
SCALE 1 : 30

FOUNDATION SCHEDULE

NO	EQUIP NO.	QTY. (NOS)	DIMENSION		HEIGHT			RE-BAR	
			FA	FB	H1	H2	H3	M	N
1	Z-004	1	6600	4600	900	270	600	D16 @150	3 D13
2	Z-005 & Z-006	1	6000	4000	900	270	600	D16 @150	3 D13

TYPE-V FOUNDATION DETAIL

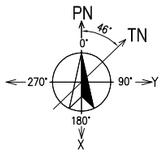

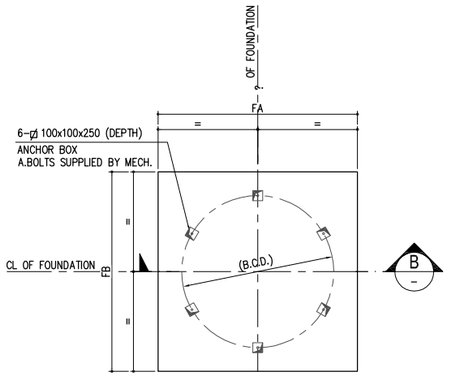

PLAN
SCALE 1 : 30

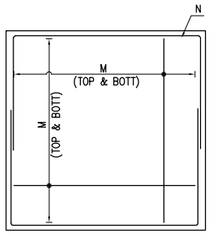

REBAR ARRANGEMENT
SCALE 1 : 30

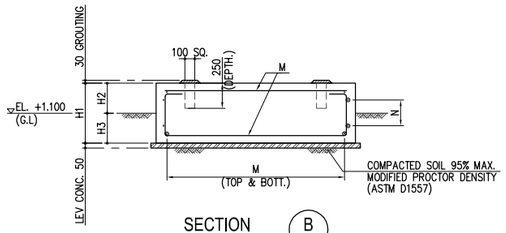

SECTION B
SCALE 1 : 30

FOUNDATION SCHEDULE

NO	EQUIP NO.	QTY. (NOS)	DIMENSION			HEIGHT			RE-BAR	
			FA	FB	B.C.D	H1	H2	H3	M	N
1	V-009	1	2200	2200	1720	900	270	600	D16 @150	3 D13
2	V-010	1	2200	2200	1420	900	270	600	D16 @150	3 D13

KEY PLAN

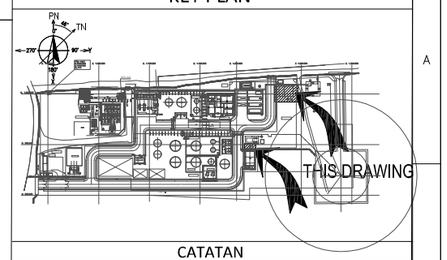

CATATAN

NOTE :

1. ALL DIMENSIONS ARE IN MILLIMETERS, ELEVATION AND COORDINATE ARE IN METERS UNLESS OTHERWISE NOTED.
2. REFERENCE OF ELEVATION AND COORDINATE
   GL. ± 0.000 = EL. +33.75 = EL +1.100
   PE = 1.000.000 : E = 424962.745
   PN = 1.000.000 : N = 9607576.210
3. MATERIAL SPECIFICATION
   -LEVELING CONCRETE fc' = 15 MPa (CEMENT TYPE-I)
   -CONCRETE STRUCTURE fc' = 28 MPa (CEMENT TYPE-I)
   -DEFORMED BAR SNI 07-2052-2002, BJTP 40
   MINIMUM YIELD STRENGTH 4000 Kg/cm?
   -PLAIN BAR SNI 07-2052-2002, BJTP 24
   MINIMUM YIELD STRENGTH 2400 Kg/cm?
   -WIREMESH SHALL CONFORM TO ASTM A185 MIN. fy = 4900 Kg/cm?
   -WIREMESH SHALL CONFORM TO ASTM A185 MIN. fy = 4900 Kg/cm?
   -GROUTING : NON SHRINK GROUT, COMP.
   STRENGTH = 35 MPA CONFORM TO ASTM C1107

NOTES :

1. BEFORE STARTING CONSTRUCTION, CONTRACTOR SHALL VERIFY ACTUAL FIELD CONDITION AND DETERMINE LOCATION, ELEVATION OF EXISTING GRADING AND OTHER STRUCTURE. THE CONTRACTOR SHALL TAKE NECESSARY MEASURES TO HOLD SAFE AND PREVENT DAMAGE TO ANY EXISTING FACILITIES.

DRAWING REFERENCE	DESCRIPTION	REV	DATE	DESCRIPTION	PREPR'D	CHECK'D	APRV'D
TMBP-SP001-CS-DET-D101	PLAN AND SECTION WATER POND						
TMBP-SP001-CS-BLD-106	FOUNDATION PLAN, DETAIL AND SECTION OF INSTRUMENT AIR PACKAGE SHELTER						
TMBP-SP001-CS-LAY-D102	OVERALL FOUNDATION LAYOUT						
TMBP-SP001-PI-PLP-D101	OVERALL PLOT PLAN DRAWING	A	12-01-2026	ISSUED FOR REVIEW	NAS	AS	MR

PT. PERTAMINA EP APPROVAL

YR	MRZ/RS
CHECKED	APPROVED

PROCET :
JASA PEMBANGUNAN FASILITAS PRODUKSI STASIUN PENGUMPUL (SP) TANJUNG MIRING BARAT & KARANGAN TIMUR

OWNER : skkmigas PERTAMINA EP

CONTRACTOR : POG

SCALE :	DRAWING NO.	SHEET. NO.	REV
1 : 30	TMBP-SP001-CS-FDN-D104	2 OF 2	A

DRAWING TITLE :
FOUNDATION FOR UTILITY FACILITY